Buffalo®

*Time to play!*

# 6' BILLIARD TABLE

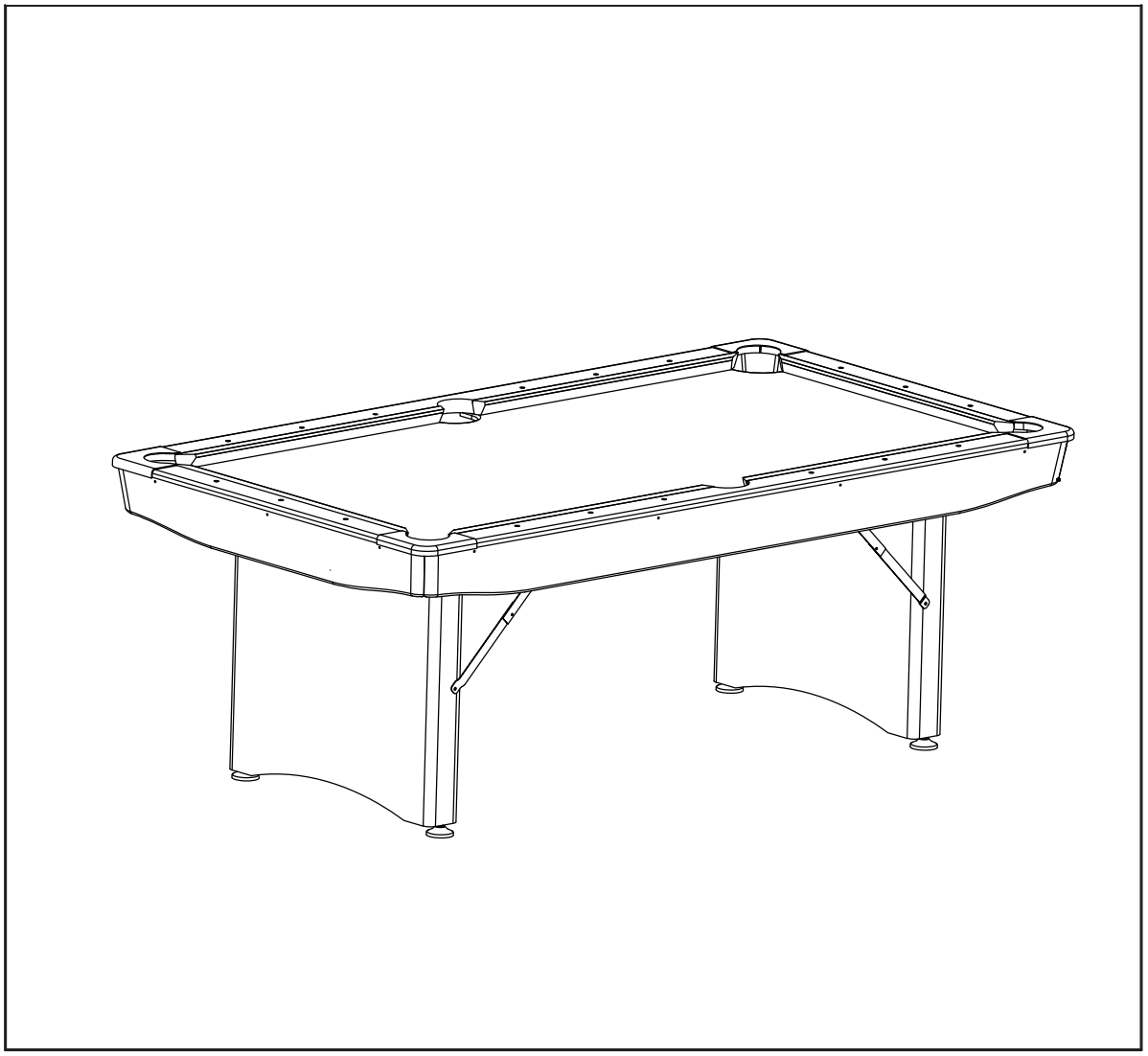

ITEM NO:6030.211

Parts List

| | | | |
|---|---|---|---|
| #1 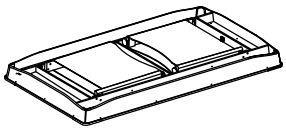 Main frame 1 piece | #2 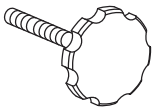 5/16"Bolt 4 pieces | #3  5/16"Washer 4 pieces | #4  Cue stick 2 pieces |
| #5 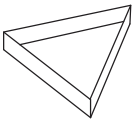 Triangle 1 piece | #6 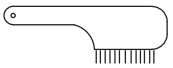 Brush 1 piece | #7 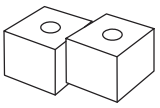 Chalk 2 pieces | #8 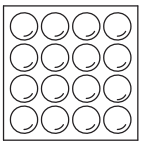 Billiard balls 1 set |
| #9 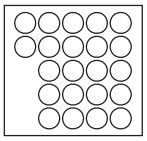 Snooker balls 1 set | | | |

# Assembly Instruction

Step 1:

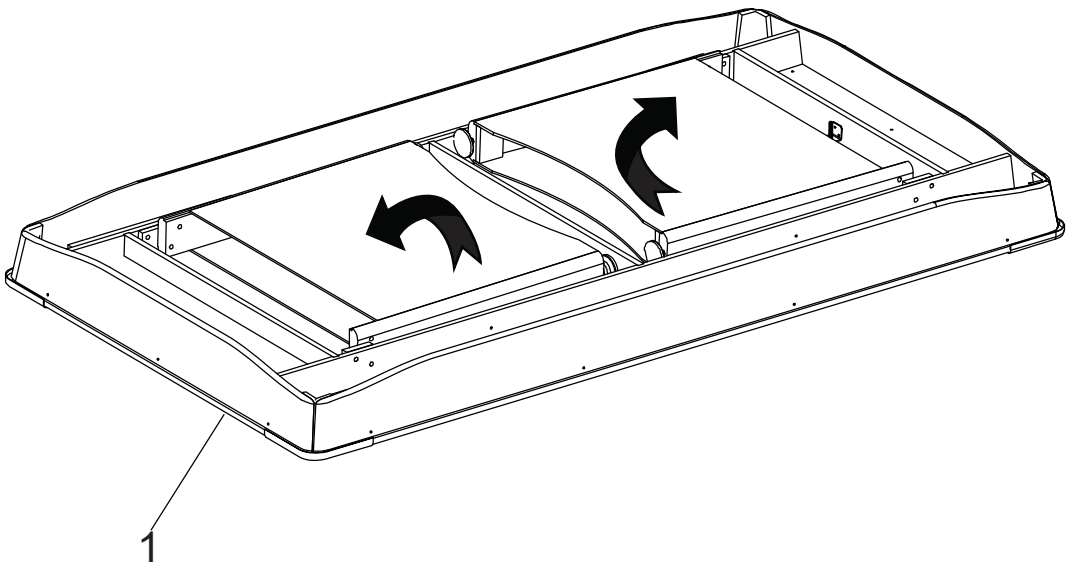

Step 2:

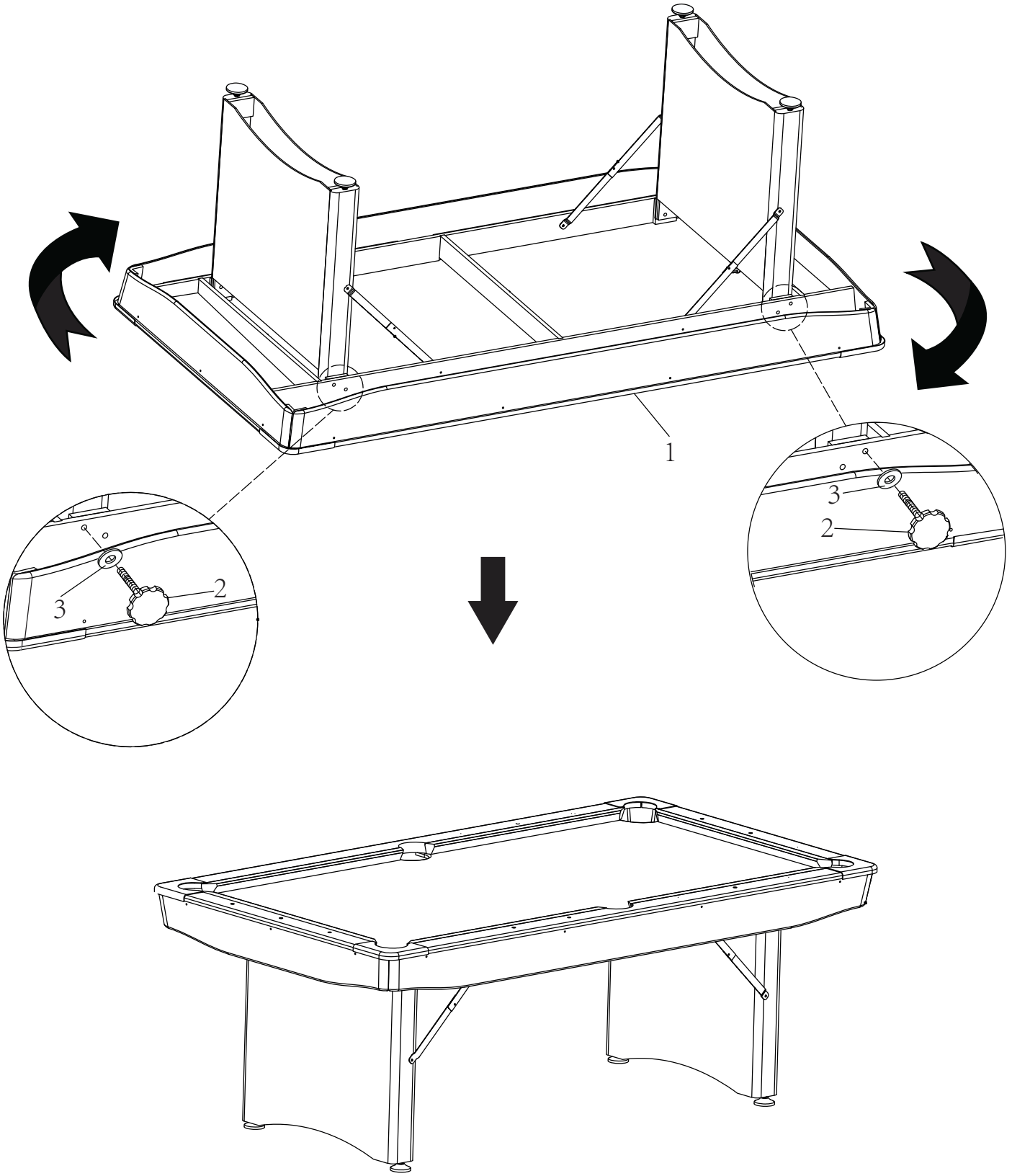


End

RoHS
REACH
0-3
22
PAP
FR
PAP22
100%
Wood from well-managed forests
FSC™ C216031